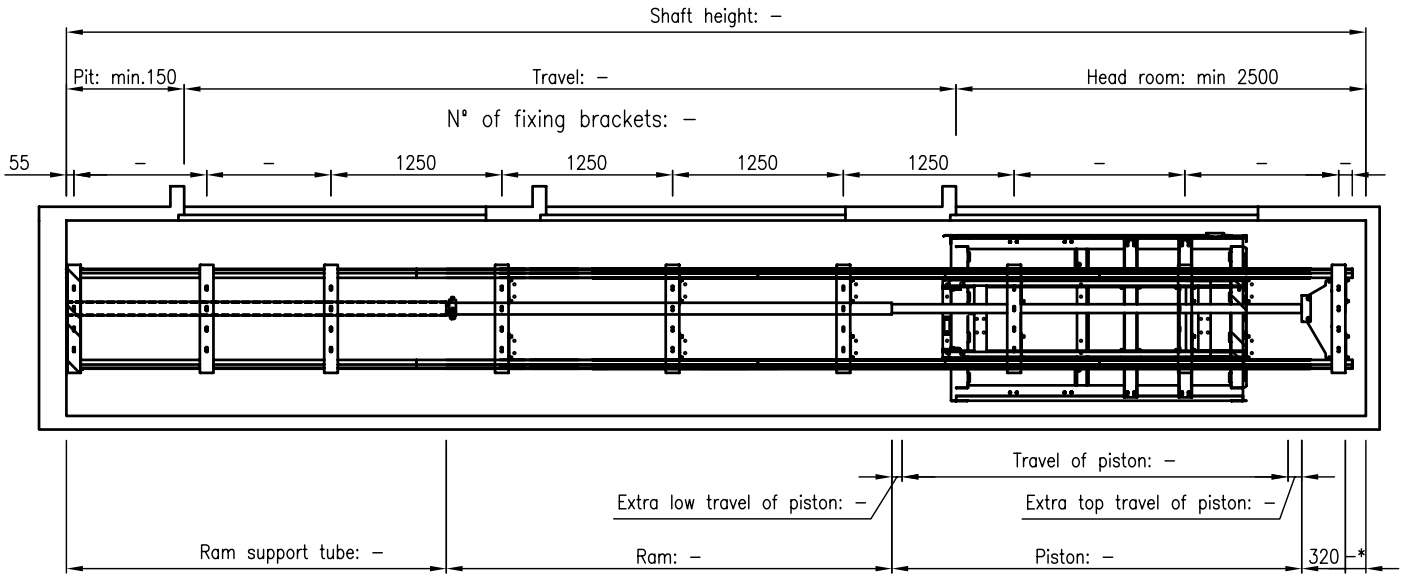

*Distance between the higher part of the head pulley and the shaft roof

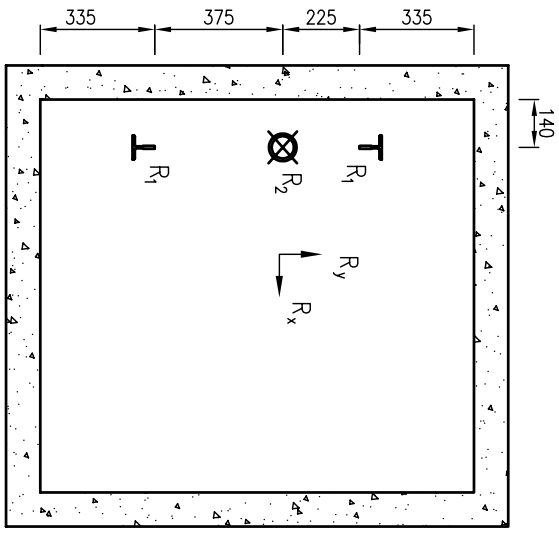

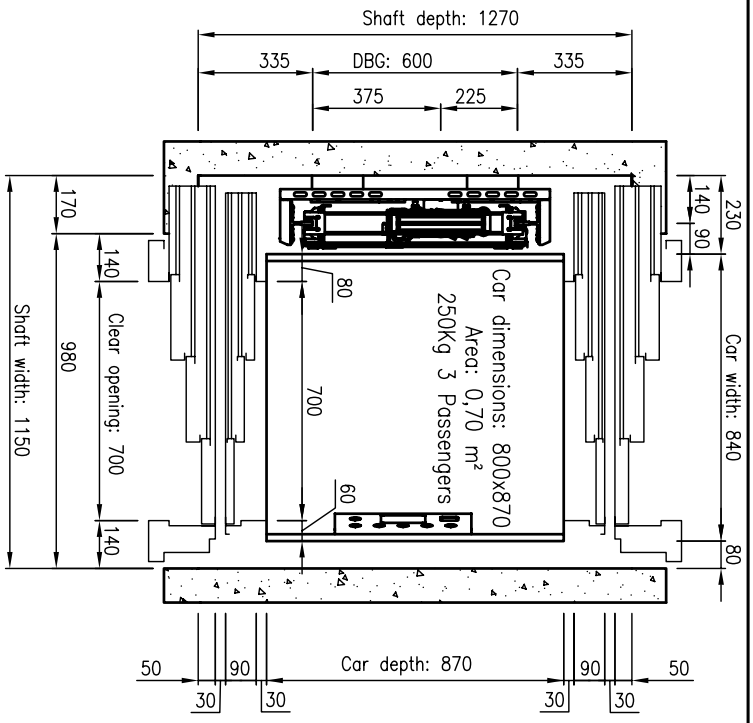

CHARACTERISTICS	
LOAD:	250 Kg
PASSENGERS:	3
RATED SPEED:	0,15 m/s
TRAVEL:	– mm
STOPS:	–
ACTING:	2:1
HEAD PULLEY:	ø250
TRACTION ROPES:	2xø
CAR GUIDES:	G7 (70/65/9)
CAR SAFETY GEAR:	PI-12
PISTON:	65/7,5
HYDRAULIC EQUIPMENT:	GMV HL6000
MOTOR POWER:	2 Cv
PUMP FLOW:	15 l/min
START:	DIRECT
NOMINAL CURRENT:	16 A
START CURRENT:	52 A
R1:	12.000 N
R2:	19.000 N
Rx:	4.000 N
Ry:	1.100 N

Date	Modification

N° OF PIECES					
GROUPS	4	3	2	1	
	Drawn		Date	Name	DENOMINATION
	V° B°				
CUSTOMER					POS.
					MATERIAL
					WEIGHT
					DRAWING

Scale: S:E

SHAFT LAYOUT

250Kg 3Passengers

Subs. Draw N° | Replaced by: | Ed.:0

FABRICACION DE ELEVADORES S.L.