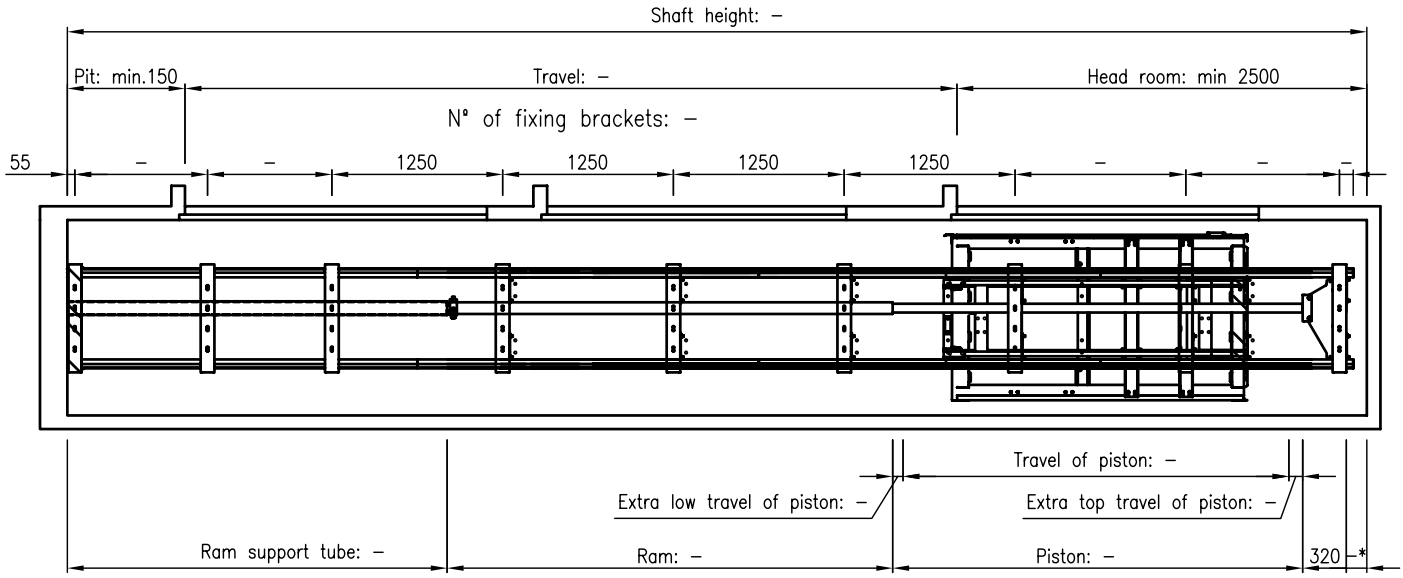

*Distance between the higher part of the head pulley and the shaft roof

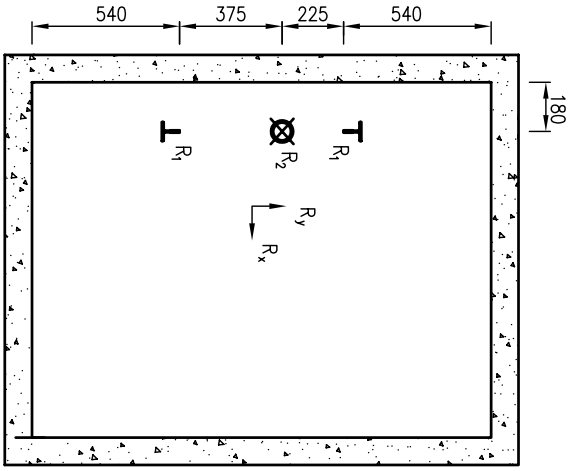

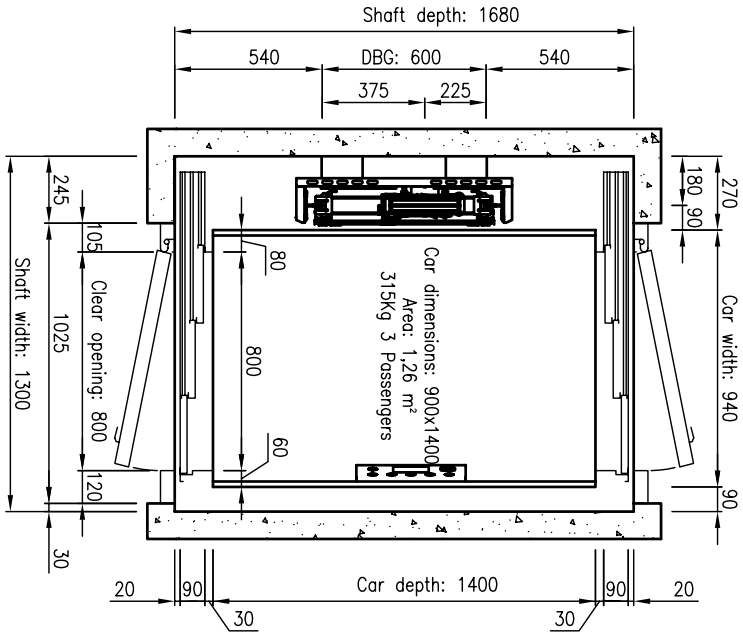

CHARACTERISTICS	
LOAD:	315 Kg
PASSENGERS:	3
RATED SPEED:	0,15 m/s
TRAVEL:	– mm
STOPS:	–
ACTING:	2:1
HEAD PULLEY:	ø250
TRACTION ROPES:	2x9ø
CAR GUIDES:	G7 (70/65/9)
CAR SAFETY GEAR:	PI–12
PISTON:	65/7,5
HYDRAULIC EQUIPMENT:	GMV HL6000
MOTOR POWER:	3 Cv
PUMP FLOW:	15 l/min
START:	DIRECT
NOMINAL CURRENT:	18 A
START CURRENT:	58 A
R1:	12.000 N
R2:	19.000 N
Rx:	4.000 N
Ry:	1.100 N

Date	Modification

Nº OF PIECES					
GROUPS	4	3	2	1	
DENOMINATION					
POS.	MATERIAL	WEIGHT	DRAWING		
CUSTOMER					
Drawn	Date	Name			
Vº Bº					
Scale: S:E	SHAFT LAYOUT 315Kg 3Passegers(1Handic.+assist.)				
Subs. Draw Nº	Replaced by:	Ed.:0			

FELESA FABRICACION DE ELEVADORES S.L.