VERTICAL SECTION

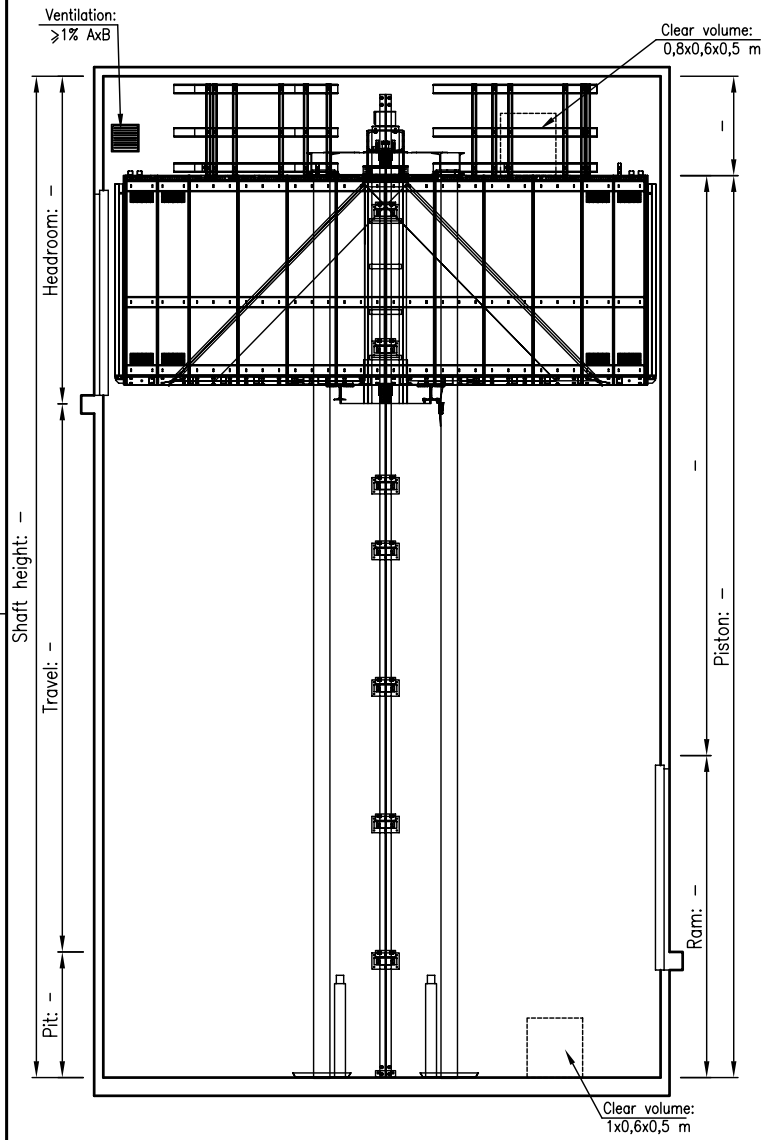

SHAFT PLAN

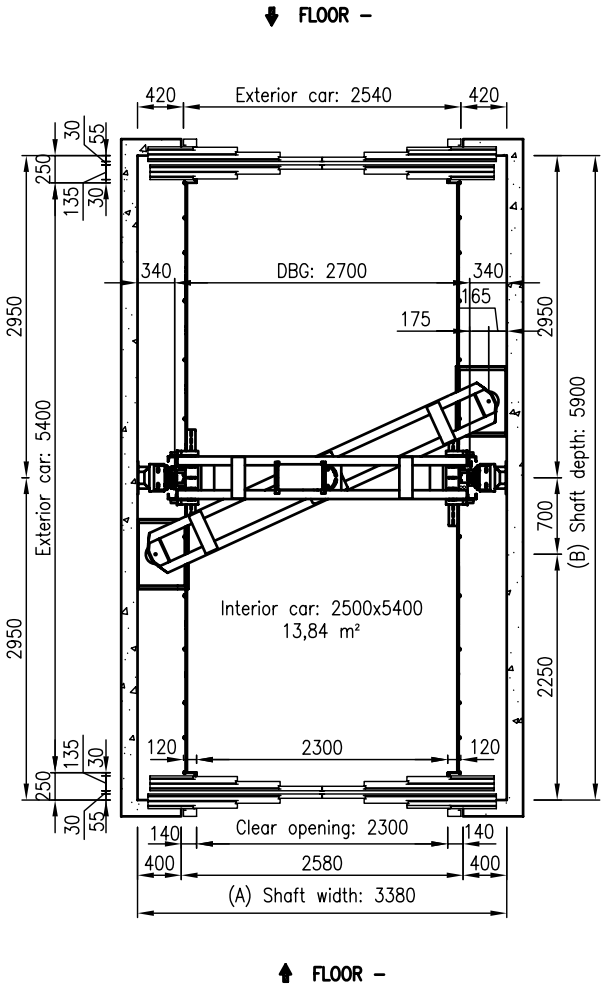

PIT

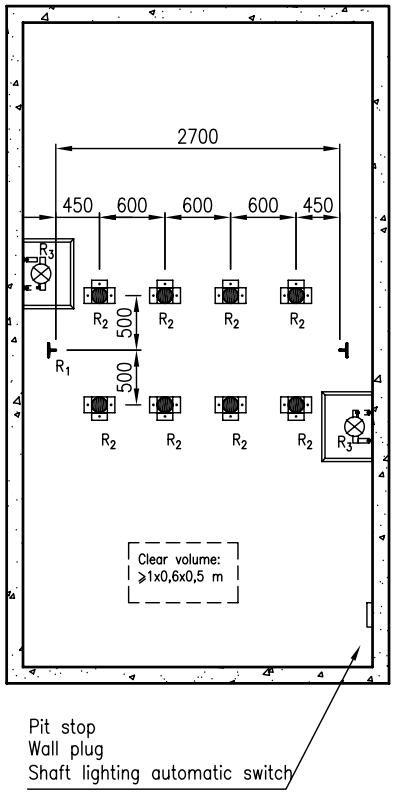

CHARACTERISTICS

LOAD:	4000 Kg
PERSONS:	53
RATED SPEED:	– m/s
TRAVEL:	– mm
HEAD ROOM:	– mm
PIT:	– mm
STOPS:	–
FLOORS:	–
HYDRAULIC EQUIPMENT:	GMV
PISTON: (2)	–
ACTING:	1:1
CAR GUIDE RAIL:	125/82/16
CAR BUFFERS: (4)	ø100x80
MOTOR POWER:	– CV
PUMP FLOW:	– L/min
START:	Y/Δ
POWER VOLTAGE:	380 V
LIGHTING POWER:	240 V
PHASES:	3
NOMINAL CURRENT:	– A
START CURRENT:	– A
PIPE: (2)	–
PIPE:	–
CONTROLLER:	–
R1:	69.677 N
R2:	32.864 N
R3:	71.187 N

Nº OF PIECES				DENOMINATION			POS.	MATERIAL	WEIGHT	DRAWING
4	3	2	1	2008	Date	Name	CUSTOMER			
GROUPS				Drawn						
				VºBº						

FELESA
FABRICACION DE ELEVADORES S.L.

Scale: S:E

SHAFT LAYOUT

Car 2Acc. 180º 2500x5400

Subs. Draw Nº | Replaced by: | Ed.:0

Date	Modification

E/05.07 Edición:1