	MG5 – CABLE BAJANTE BUCLE EXTERIOR 8m	CODIGO
	MG5 – DOWNLINK LOOP EXTERIOR CABLE 8m	528162
	MG5 – CÂBLE BOUCLE EXTERIOR 8m	

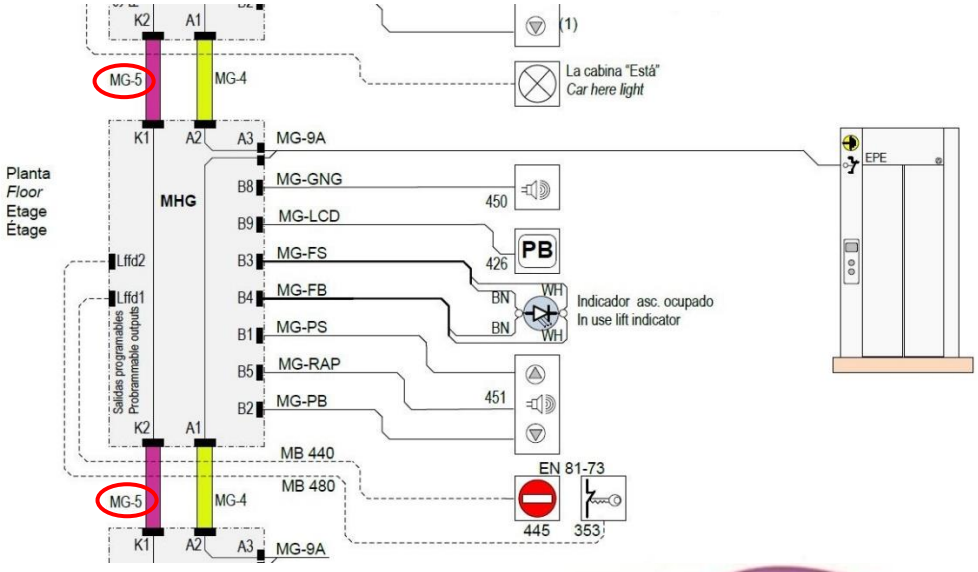

DATOS TECNICOS	TECHNICAL DATA	DONNÉES TECHNIQUES

- **FABRICANTE/MANUFACTURER/FABRICANT:** Carlos Silva
- **PRODUCTO/PRODUCT/PRODUIT:** MG5

CODE	L (m)	CARLOS SILVA CODE
528153	0.2	CC6905002
528154	0.5	CC6905005
528155	1	CC6905010
528156	2	CC6905020
528157	3.5	CC6905035
528158	4	CC6905040
528159	4.5	CC6905045

CODE	L (m)	CARLOS SILVA CODE
528160	5	CC6905050
528161	6	CC6905060
528162	8	CC6905080
528163	10	CC6905100
528164	12	CC6905120
528165	15	CC6905150
528166	20	CC6905200